December 17, 2024

OC Wine Experience LLC
21 Tuolumne Way
Aliso Viejo, CA 92656

CITY OF DANA POINT
ADMINISTRATIVE PERMIT
MINOR CONDITIONAL USE PERMIT CUP24-0007(M)

PROJECT APPLICANT: OC Wine Experience LLC

PROPERTY OWNER: M & A Gabaee

LOCATION: 34137 Golden Lantern (APN: 682-322-09 and 682-322-10)

REQUEST: A request to establish an Alcoholic Beverage Outlet (Wine Experience) Type 20 (Off-Sale Beer and Wine) and 42 (On-Sale Beer and Wine – Public Premises) Alcoholic Beverage Control (ABC) licenses to allow the sale of alcoholic beverages for consumption on and off the premises located within the Town Center Mixed Use Zoning District.

ENVIRONMENTAL: Pursuant to the California Environmental Quality Act (CEQA), the project is categorically exempt per Section 15301(a) of the CEQA Guidelines (Class 1 – Existing Facilities) since the project consists of establishing an alcoholic beverage outlet within an existing vacant suite and outdoor patio area and proposes interior tenant improvements to accommodate these uses.

DETERMINATION: The Community Development Director hereby
_____ APPROVES
_____ DENIES
the requested ENTITLEMENT described herein subject to the attached findings and applicable conditions.

_____
Brenda Wisneski, Director
Community Development Department

Supporting Document 1: Project Plans

DRAFT

BACKGROUND/DISCUSSION:

- The project site is located on the first floor the Vista Del Mar mixed-use development within an existing, yet to be occupied vacant suite addressed as 34137 Golden Lantern. The project site is in the Town Center Mixed Use District (TC-MU) Zoning District.
- The site is improved with a three-story mixed-use structure at the corner of Pacific Coast Highway and Golden Lantern. The building in which the proposed Alcoholic Beverage Outlet is proposed contains a mixture of commercial uses on the first floor and residential units on the second and third floors and two subterranean parking levels.
- The project site is surrounded by and a variety of commercial uses/structures, and mixed-use structures within the TC-MU District.
- The applicant is requesting to establish an Alcoholic Beverage Outlet (Wine Experience) (Alcoholic Beverage Control (ABC) Type 20 - Off-Sale Beer and Wine and 42 - On-Sale Beer and Wine – Public Premises) to allow for the sale of alcoholic beverages for consumption on and off the premise.
- An ABC Type 20 (Off-Sale Beer and Wine) license allows the sale of beer and wine for consumption off the premises where sold, typical for retail stores. An ABC Type 42 (On-Sale Beer and Wine – Public Premises) license allows for the sale of beer and wine for consumption on or off the premises, without food services. Additionally, no distilled spirits may be on the premises. Minors are not allowed within the areas identified for Type 42.
- The Land Use Matrix of the Dana Point Town Center Plan (DPTCP) identifies Alcoholic Beverage Outlets as a conditional use subject to special use standards. Section 9.07.040 (Alcoholic Beverage Outlets) contained in Chapter 9.07 (Special Use Standards) of the Dana Point Zoning Code (DPZC) specify the regulations for the establishment, operation, and maintenance of any alcoholic beverage outlet.
- Pursuant to DPZC Section 9.07.040(b)(2)(B), a Minor Conditional Use Permit (CUP(M)), is required to establish an Alcoholic Beverage Outlet within one hundred (100) feet of any area zoned or used for residential purposes. Since the mixed-use location contains residential dwelling units, a CUP(M) is required.
- The proposed Alcoholic Beverage Outlet combines both retail and restaurant uses. The floorplan is designed so that more than 50 percent of the gross floor area of the subject suite is dedicated to the retail use. Since the principal use of the establishment is retail, this configuration allows the use of the 'General Retail" parking demand identified in DPZC Section 9.35.080(e)(42). Footnote 1 related thereto allows a reduction in the "Restaurants" uses parking demand on the site based on the two (2) provisions of Footnote 1. Footnote 1 allows that "if restaurant space occupies more than 20 percent of the total Gross Floor Area, or if an individual restaurant contains more than 2,000 square feet, then additional parking stalls shall be provided for all restaurant space above the 20 percent or the 2,000 square feet, whichever is greater. The additional parking shall be calculated at the applicable restaurant rate." The first provision ("if restaurant space occupies more than 20% of the total Gross Floor Area") of Footnote 1 is applicable in this scenario since it

DRAFT

equates to a greater parking demand that allows for all the commercial uses on site 33 stalls, leaving a surplus of seven (7) stalls on site for the commercial uses. The two (2) other commercial suites on-site do not contain retail uses, and therefore if a new tenant were to lease the subject suite the use must contain a retail component to utilize the parking demand identified in Footnote 1 of DPZC Section 9.35.080(e)(42). The residential parking demand for the subject mixed-use structure is calculated separately.

- Furthermore, the applicant proposes to establish an outdoor patio area that encroaches within the City's right-of-way (ROW). The outdoor patio area will not include more than 16 chairs to ensure that the parking demand is not increased pursuant to DPZC Section 9.35.080(e)(47), and has been conditionally approved by the Public Works and Engineering Services to allow for the encroach into the City's ROW, subject to the approval of an encroachment permit.
- The Alcoholic Beverage Outlet (Wine Experience) would serve as a wine tasting/retail store. The store would sell high quality boutique wines by the bottle and through wine dispensers, as well as cheeses and small bites. The store will have nine (9) employees and would have the following operating hours:
    - Closed Mondays
    - Tuesday and Wednesday – 2:00 P.M. to 9:00 P.M.
    - Thursday through Saturday – 2:00 P.M. to 10:00 P.M.
    - Sunday – 12:00 P.M. to 8:00 P.M.

- Staff recommends approval subject to the attached findings and conditions of approval.

FINDINGS:

A. Based on the evidence presented at the public hearing, the Director of Community Development makes the following findings and approves Minor Conditional Use Permit CUP24-0007(M), subject to conditions of approval:

1. The proposed conditional use is consistent with the City of Dana Point General Plan **in that the proposed Alcoholic Beverage Outlet for on-site and off-site consumption of alcoholic beverages promotes Goal 6 Policy 6.2 of the Land Use Element of the General Plan to "Encourage retail businesses and mixtures of land uses that help to generate positive pedestrian activity in the area" since the project site is located on the first floor of a mixed-use development that includes residential uses, the Alcoholic Beverage Outlet would increase pedestrian activity along Golden Lantern and Pacific Coast Highway.**

2. That the nature, condition, and development of adjacent uses, buildings, and structures have been considered, and the proposed conditional use will not adversely affect or be materially detrimental to the adjacent uses, buildings, or structures **in that the sale of wine for on-site consumption is only permitted**

DRAFT

within the existing suite or within the dedicated outdoor patio area along Golden Lantern, and that the Type 20 license allows the sale of wine for off-stie consumption. In addition, no expansion of the existing building footprint would be proposed to accommodate the new use since it is located within an existing vacant suite that would require interior tenant improvements, and that the proposed outdoor patio area that is located within the City's sidewalk right-of-way was reviewed and conditionally approved as part of this minor CUP.

3. The proposed site is adequate in size and shape to accommodate the yards, fences, parking and loading facilities, landscaping and other land use development features prescribed in the Dana Point Municipal Code (DPMC) and required in order to integrate the use with existing and planned uses in the vicinity **in that the site contains a recently completed three-story mixed-use structure with subterranean parking levels in which the proposed Alcoholic Beverage Outlet is to be located on the first floor of a vacant suite, and sufficient parking was determined to be available for the retail and restaurant use mixture prior to the request to establish an Alcoholic Beverage Outlet as part of this Minor CUP. Since the principal use of the establishment is retail, the "General Retail" parking demand identified in DPZC Section 9.35.080(e)(42) can be applied. Utilizing Footnote 1 of DPZC Section 9.35.080(e)(42) – General Retail, the parking demand for all the commercial uses on site is 33 stalls, leaving a surplus of seven (7) stalls on site for the commercial uses. Furthermore, an outdoor patio area within the City's sidewalk right-of-way was reviewed and conditionally approved as part of this minor CUP for the proposed Alcoholic Beverage Outlet.**

4. The proposed use will not be contrary to the public interest or injurious to nearby properties, and the spirit and intent of Section 9.07.040 (Alcoholic Beverage Outlets) of the DPMC will be observed **in that the proposal is to establish an Alcoholic Beverage Outlet (Wine Experience) Type 20 (Off-Sale Beer and Wine) and 42 (On-Sale Beer and Wine – Public Premises) Alcoholic Beverage Control (ABC) licenses to allow the sale of alcoholic beverages for consumption on and off the premises and that the new use will not be contrary to the public interest and with the hours limitations as specified in the conditions of the project would not be injurious to nearby properties.**

5. The proposed use will not enlarge or encourage the development of a "skid row" area **in that the applicant proposes to establish an Alcoholic Beverage Outlet to allow the sale of wine for retail and consumption on and off the premise (ABC Type 20 and 42 licenses). Consumption on site will occur within an existing suite, and on a proposed outdoor patio area both on the project site and within the adjacent City right-of-way. With the consumption of alcoholic beverages being limited to ABC approved areas only, the establishment of**

DRAFT

an Alcoholic Beverage Outlet would not enlarge or encourage the development of a "skid row" area and serve public convenience or necessity.

6. The establishment of an additional regulated use in the area will not be contrary to any program of neighborhood conservation nor will it interfere with any other City program **in that the subject site and the proposed regulated use are not subject to any neighborhood conservation program, nor will it interfere with any other City program.**

7. All applicable regulations of the zoning district in which the use is permitted will be observed **in that pursuant to the DPTCP, Alcoholic Beverage Outlets are a conditionally permitted use subject to the provisions of Section 9.07.040 (Alcoholic Beverage Outlets) of the DPZC. Conditions of approval contained in this permit will ensure the Alcoholic Beverage Outlet use will not result in adverse impacts to neighboring development, and all proposed improvements are subject to building permit approval to ensure all zoning developments standards are met.**

B. Based on the foregoing, the Director of Community Development determines that this project is Categorically Exempt pursuant to Section 15301(a) of the CEQA Guidelines (Class 1 – Existing Facilities) since the project consists of establishing an alcoholic beverage outlet within an existing vacant suite and an outdoor patio area and proposes interior tenant improvements to accommodate these uses.

CONDITIONS OF APPROVAL:

The City of Dana Point hereby grants approval of Minor Conditional Use Permit CUP24-0007(M) for the referenced project. This permit is valid subject to the following conditions of approval:

A. General:

1. Approval of this application permits the establishment of an Alcoholic Beverage Outlet (Wine Experience) Type 20 (Off-Sale Beer and Wine) and 42 (On-Sale Beer and Wine – Public Premises) Alcoholic Beverage Control (ABC) licenses to allow the sale of alcoholic beverages for consumption on and off the premises, located at 34137 Golden Lantern. Subsequent changes to the approved scope-of-work shall be in substantial compliance with those plans presented to the Community Development Director, and in compliance with applicable provisions of the City of Dana Point General Plan and Municipal and Zoning Codes. (PLN)

DRAFT

2. The application is approved as a plan for the location and design of the uses, structures, features, and materials shown on the approved plans. Any demolition beyond that described in the approved plans or any relocation, alteration, or addition to any use, structure, feature, or material, not specifically approved by this application, will nullify this approving action. If any changes are proposed regarding the location or alteration to the appearance or use of any structure, an amendment to this permit shall be submitted for approval by the Director of Community Development. If the Director of Community Development determines that the proposed change complies with the provisions and the spirit and intent of the approval action, and that the action would have been the same for the amendment as for the approved plot plan, he may approve the amendment without requiring a new public hearing. (PLN)

3. This discretionary permit(s) will become void two (2) years following the effective date of the approval if the privileges authorized are not implemented or utilized or, if construction work is involved, such work is not commenced with such two (2) year time period or; the Director of Community Development or the Planning Commission, as applicable grants an extension of time. Such time extensions shall be requested in writing by the applicant or authorized agent prior to the expiration of the initial two-year approval period, or any subsequently approved time extensions. (PLN)

4. Failure to abide by and faithfully comply with any and all conditions attached to the granting of this permit shall constitute grounds for revocation of said permit. (PLN)

5. The applicant or any successor-in-interest shall defend, indemnify, and hold harmless the City of Dana Point ("CITY"), its agents, officers, or employees from any claim, action, or proceeding against the CITY, its agents, officers, or employees to attack, set aside, void, or annul an approval or any other action of the CITY, its advisory agencies, appeal boards, or legislative body concerning the project. Applicant's duty to defend, indemnify and hold harmless the city shall include paying the CITY's attorney fees, costs and expenses incurred concerning the claim, action or proceeding.

   The applicant or any successor-in-interest shall further protect, defend, indemnify and hold harmless the City, its officers, employees, and agents from any and all claims, actions or proceedings against the City, its officers, employees, or agents arising out of or resulting from negligence of the applicant or the applicant's agents, employees or contractors. Applicant's duty to defend, indemnify and hold harmless the City shall include paying the CITY's attorney fees, costs and expenses incurred concerning the claim, action, or proceeding.

DRAFT

The applicant shall also reimburse the City for City Attorney fees and costs associated with the review of the proposed project and any other related documentation. (PLN)

6. The applicant and applicant's successors in interest shall be fully responsible for knowing and complying with all conditions of approval, including making known the conditions to City staff for future governmental permits or actions on the project site. (PLN)

7. The applicant and applicant's successors in interest shall be responsible for payment of all applicable fees along with reimbursement for all City expense in ensuring compliance with these conditions.

8. The applicant shall obtain all applicable permits for the proposed improvements.

9. The hours of operation shall be the following:

   a. Closed Mondays
   b. Tuesday and Wednesday – 2:00 P.M. to 9:00 P.M.
   c. Thursday through Saturday – 2:00 P.M. to 10:00 P.M.
   d. Sunday – 12:00 P.M. to 8:00 P.M.

   Subsequent changes to the approved hours shall be in substantial compliance with this permit and in compliance with the applicable provisions of the DPZC.

   In the event that the City receives complaints from the public related to noise levels at the establishment, including on the outdoor patio, the City reserves the right to require the Alcoholic Beverage Outlet to limit outdoor patio hours as needed. (PLN)

10. There shall be no advertisement of alcoholic beverages outdoors or in windows. (PLN)

11. Any employee selling alcoholic beverages shall be 21 years of age or over and complete a Licensee Education on Alcohol and Drugs (LEAD) training and receive a certificate prior to selling alcohol. (PLN)

12. All proposed uses shall comply with the provisions of the City's Noise Ordinance at all times. (PLN)

13. In order to reduce noise caused by the clanking of bottles into trash/recycling containers at the close of business, all glass containers shall be properly disposed of after 7:00 A.M., the following day into appropriate trash/recycling bins. (PLN)

DRAFT

14. Consumption of alcoholic beverages shall only be permitted throughout suite space addressed as 34137 Golden Lantern and within the boundaries of the adjacent on and off site partitioned, outdoor dining areas illustrated on the project plans approved by this permit (Exhibit A outdoor dining areas). (PLN)

15. The ABC license holder/operator shall maintain, post, and enforce the current "Do Not Sell List) provided by the Orange County Sheriff Department. (PLN)

16. There shall be appropriate and conspicuous postings of a notice inside the premises, indicating that consumption of alcohol outside the approved consumption areas is prohibited by law, except as may be permitted in the designated outdoor drinking/eating area. The notice shall be at least one and one-half (1.5) square feet in size. (PLN)

17. No live entertainment is permitted unless approved through a separate Special Event Permit. A Special Event Permit shall be issued for any future activities which temporarily intensify the impacts (i.e., parking, traffic, noise, light and glare, etc.) of the wine tasting room (PLN)

18. Any proposed exterior building signage shall be reviewed and approved under a separate permit. (PLN)

19. The City shall maintain the option to reconsider the Conditional Use Permit (and conditions contained herein), at any time if the Community Development Director finds it necessary to re-evaluate impacts of the use on the surrounding community. (PLN)

20. Deliveries and refuse collection shall be prohibited between the hours of 10:00 P.M. and 8:00 A.M. daily, unless otherwise approved by the Director of Community Development. (PLN)

21. The applicant/operator shall ensure that the trash dumpsters and/or containers are maintained to control odors. (PLN)

22. All trash shall be stored within the building or within containers stored in the trash enclosure (three walls and self-latching gate) or otherwise screened from view of neighboring properties, except when placed for pick-up by refuse collection agencies. (PLN)

23. Verification of all conditions of approval are required by all City Departments. (PLN)

DRAFT

24. The applicant shall be responsible for coordination with water district, sewer district, SDG&E, AT&T California and Cox Communication Services for the provision of water, sewer, electric, cable television and telephone and services. The applicant is responsible to coordinate any potential conflicts or existing easements. (PWE)

25. The applicant shall exercise special care during the construction phase of this project to prevent any off-site siltation. The applicant shall provide erosion and sediment control measures at all times. The applicant shall maintain the erosion and sediment control devices until the final approval of all permits. (PWE)

26. The applicant, property owner or successor in interest shall submit a standard Waste Reduction and Recycling Plan to the City's C&D official per the Dana Point Municipal Code. A deposit will be required upon approval of the Waste Management Plan to ensure compliance. The standard Waste Reduction and Recycling Plan shall be reviewed and approved and deposit posted prior to issuance of any permits. (PWE)

27. Prior to the commencement of any work within the public right-of-way, the applicant shall apply and be approved for an encroachment permit. (PWE)

28. The applicant shall not install footing or foundation at the public right-of-way. New barrier/fence shall be bolted or any other method that may be removed. (PWE)

B. Prior to the issuance of a Building Permit or release on certain related inspections, the applicant shall meet the following conditions:

29. The subject "Conditions of Approval" section of this permit shall be copied in its entirety, placed directly onto a separate plan sheet in both the City and job plan sets prior to the Planning Division signing off for the building final. (PLN)

30. All approvals from outside Departments and Agencies are required.

C. Prior to the issuance of a certificate of use and occupancy or during operation of the project the applicant shall meet the following:

31. The applicant shall contact the Planning Division to conduct a final inspection prior to close out of future Building Permits to ensure compliance with all conditions related to CUP24-0007(M), including installation of alcoholic beverage consumption area barriers prior to contacting the Building/Safety Division for final project sign-off. (PLN)

DRAFT

EXHIBIT A

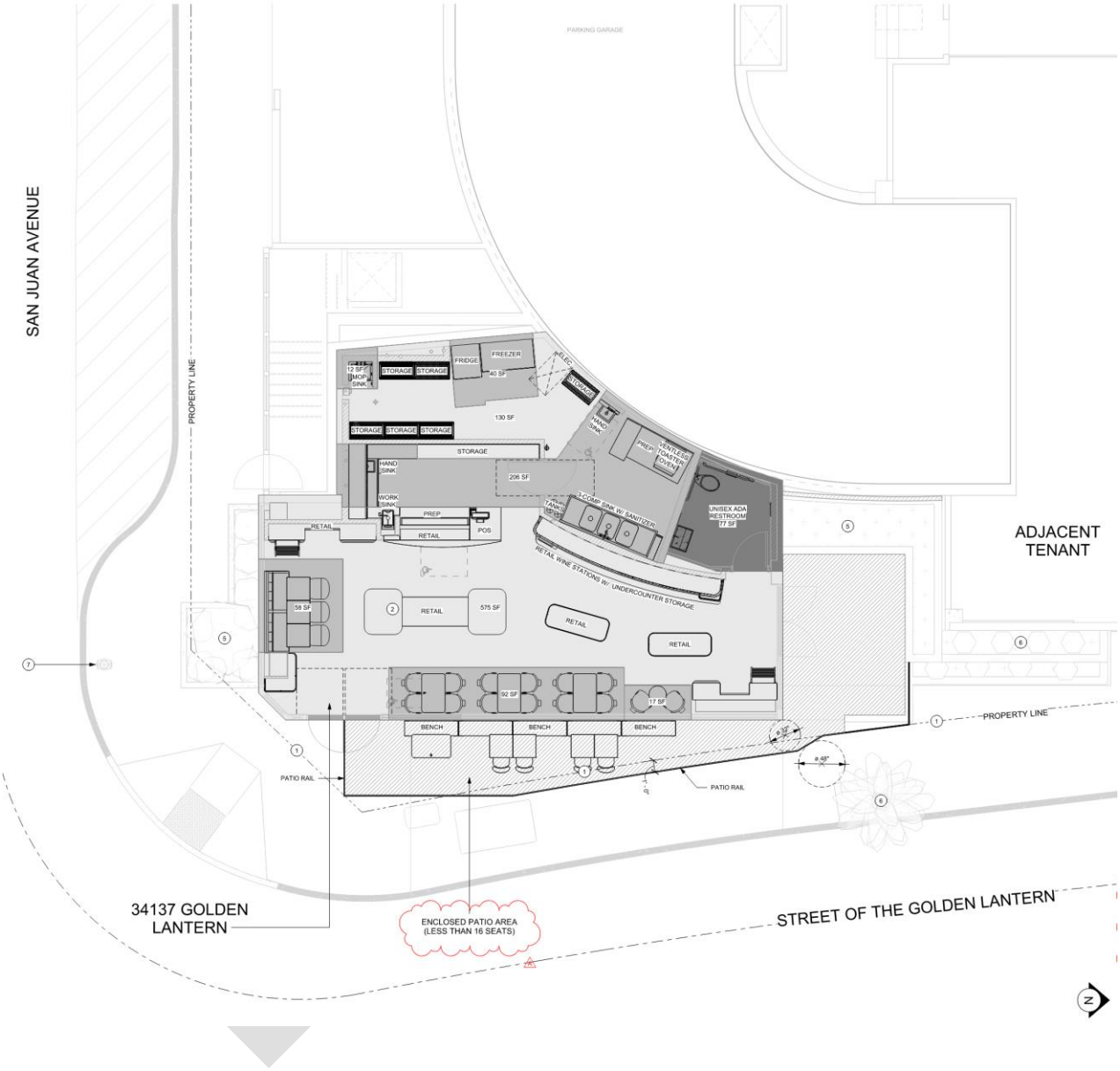
SAN JUAN AVENUE
PROPERTY LINE
PARKING GARAGE
12 SF
MOP SINK
STORAGE
STORAGE
FRIDGE
FREEZER
40 SF
ELEC.
ELEC.
130 SF
STORAGE
STORAGE
STORAGE
STORAGE
HAND SINK
206 SF
WORK SINK
PREP
RETAIL
RETAIL
POS
HAND SINK
PREP
VENTLESS TOASTER OVEN
3-COMP SINK W/ SANITIZER
TANK
UNISEX ADA RESTROOM 77 SF
RETAIL WINE STATIONS W/ UNDERCOUNTER STORAGE
58 SF
RETAIL
575 SF
RETAIL
RETAIL
92 SF
17 SF
BENCH
BENCH
BENCH
PATIO RAIL
PATIO RAIL
PROPERTY LINE
ADJACENT TENANT
34137 GOLDEN LANTERN
ENCLOSED PATIO AREA (LESS THAN 16 SEATS)
STREET OF THE GOLDEN LANTERN

PARKING REQUIREMENTS TABLE

Tenant	Plan Check #	Address	Suite	Gross Floor Area (GFA)[1]	Parking Code	Req. Parking	Dana Point Zoning Code § 9.35.080(e) Use & Notes
		34199 PCH		2,104.0	1/100 GFA	21.0	(42)[7] General Retail - Restaurant Provision [(47): Dine-in (< 4,000 SF-GFA)
Philz Coffee	BL023-0867	outdoor dining area > 16 seats		98.0	1/150 SF	0.0	Only 16 seats shown on plans
Citi Bank	BL024-0676	34117 Golden Lantern		2,429.0	1/250 GFA	9.7	(33) Financial Services
Wine Bar (Proposed)		34137 Golden Lantern					
		Retail		743.7	1/220 GFA[1]	3.4	(42) General Retail — Multi-tenant with less than 25,000 SF-GFA
		Restaurant		463.2	1/100 GFA	4.6	(42)[7] General Retail — Restaurant Provision [(47): Dine-in: (< 4,000 SF-GFA)
		outdoor dining area > 16		0.0	1/150 SF		Less than 16 shown on preliminary plans
			Total GFA:	5,740	Direct Code Calculation Parking Required	39	[7]If restaurant space occupies more than 20% of the total GFA, or if an individual restaurant contains more than 2,000 SF, then additional parking stalls shall be provided for all restaurant space above the 20% or the 2,000 SF, whichever is greater. The additional parking shall be calculated at the applicable restaurant rate.
			Total Retail	743.7			

[1]GFA: As from original permitted building plans for those suites not yet submitted for T.I. alterations.

PARKING SUPPLY	
Bicycle Stalls Provided	2
Level P1 Commercial Stalls	9
Level P1 Extra Stalls	5
Level P1 Residential Visitor	6
Ground Level Commercial Stalls	18
Total Parking Garage Stalls	40
Parking Stall Surplus/Shortage	1

OC Wine Experience
November 7, 2024
Page 3

VICINITY MAP

NOT USED

SITE PLAN KEYNOTES

1. EXISTING PROPERTY LINE TO REMAIN
2. NEW WINE EXPERIENCE AREA OF WORK
3. EXISTING ADJACENT PROPERTY TO REMAIN, (NIC)
4. EXISTING GARAGE ENTRANCE / EXIT TO REMAIN (NIC)
5. EXISTING FILTRATION PLANTER TO REMAIN.
6. EXISTING LANDSCAPING TO REMAIN, (NIC)
7. EXISTING FIRE HYDRANT TO REMAIN. (NIC)
8. EXISTING PARKING TO REMAIN. (NIC)
9. EXISTING ACCESSIBLE PARKING TO REMAIN. (NIC)
10. EXISTING TRASH ENCLOSURE TO REMAIN. (NIC)

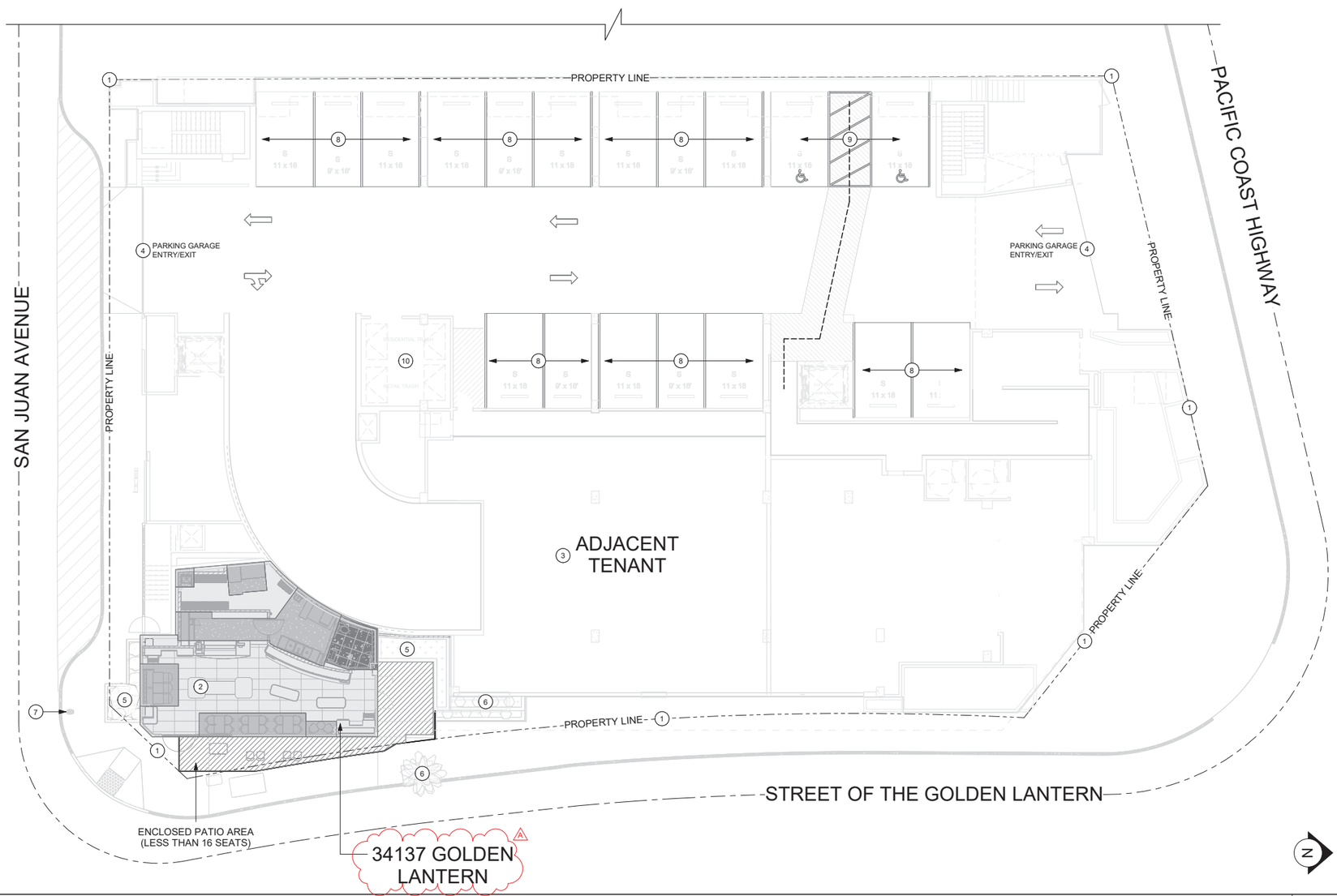

GROUND FLOOR / SITE PLAN 3/32" = 1'-0" 1

LEGEND

- EXISTING LANDSCAPE AREA
- EXISTING 6" (150MM) CONCRETE CURB
- ACCESSIBLE PATH OF TRAVEL
- RETAIL AREA
- RESTAURANT AREA
- OUTDOOR SEATING AREA
- RESTROOM

2ND MINOR USE PERMIT SUBMITTAL 11-22-2024

CONSULTANT
HESTIA ATELIER ARCHITECTURE
3 PETERS CANYON RD. #110
IRVINE, CA. 92606

SEAL

WINE EXPERIENCE
DANA POINT

WINE EXPERIENCE

34137 GOLDEN LANTERN,
DANA POINT, CA 92629

PROJECT #: --
ISSUE DATE: 11 - 07 - 2024
DESIGN MANAGER: E. C.
PRODUCTION DESIGNER: T. H.
CHECKED BY: I. D.

Revision Schedule

Rev	Date	By	Description
A	Date 1		MINOR USE PERMIT

SHEET TITLE:
OVERALL GROUND FLOOR / SITE PLAN
SCALE: AS SHOWN

SHEET NUMBER:
A0.3

11/22/2024 6:17:39 PM W:\Projects\One-Off\Dana Point 34137 Golden Lantern\Publish\2024-11-11 Minor Use Permit\2024-11-15 34137_OC Wine Experience_ Minor Use Permit.rvt

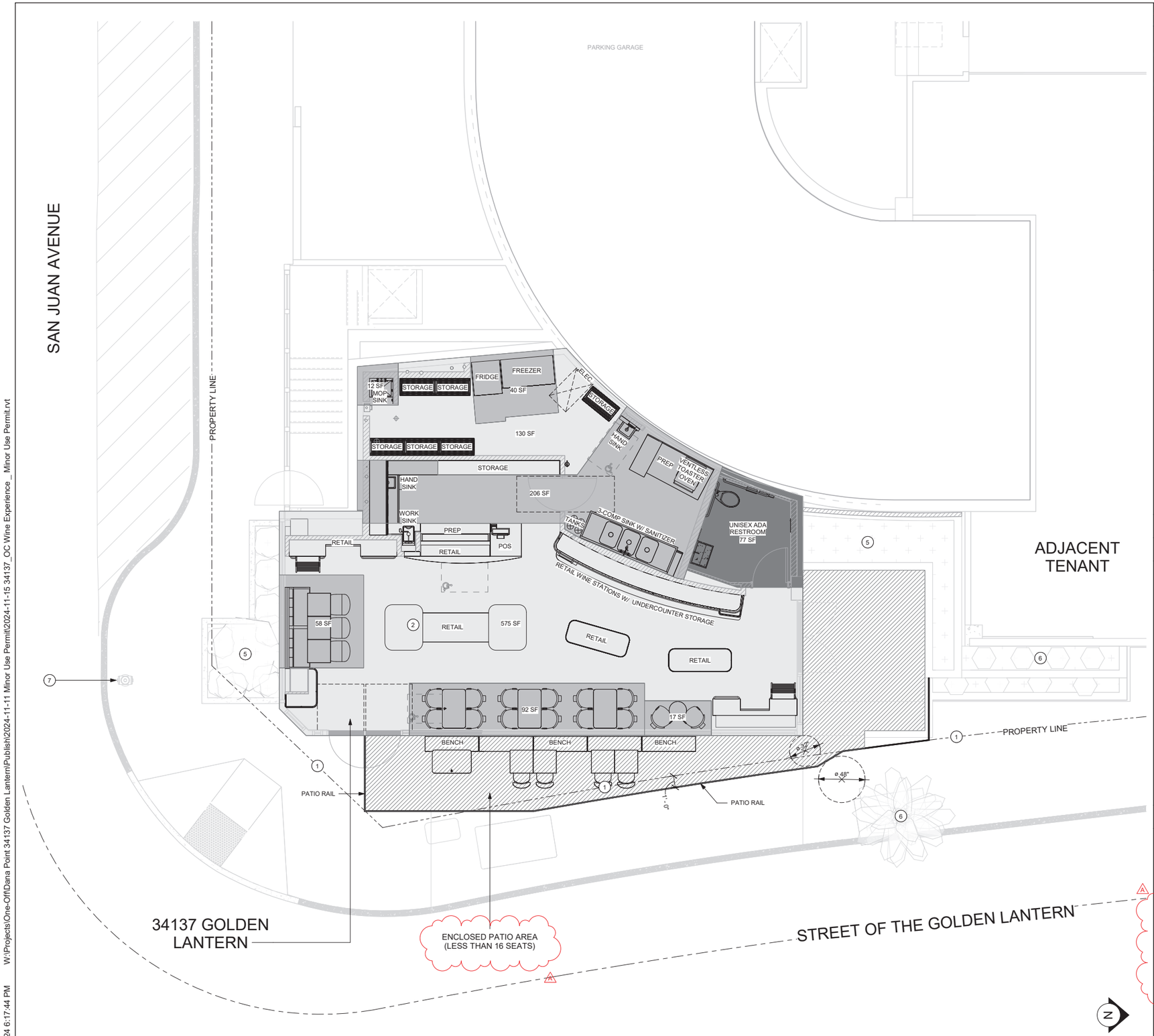

GROUND FLOOR AREA PLAN

1/4" = 1'-0" (1)

GROSS FLOOR AREA ANALYSIS

RESTROOM :	UNISEX ADA RESTROOM	77 SF	(38.5 SF X 2)
RETAIL :	RETAIL	575 SF	
	RETAIL STORAGE	130 SF	
TOTAL RETAIL AREA		**705 SF**	+ 38.5 SF
		743.5 SF	
RESTAURANT:	SEATING	166 SF	
	FOOD SERVICE PREP	258 SF	
TOTAL RESTAURANT AREA		**470 SF**	+ 38.5 SF
		463.5 SF	
TOTAL GROSS FLOOR AREA		**1,207 SF**	

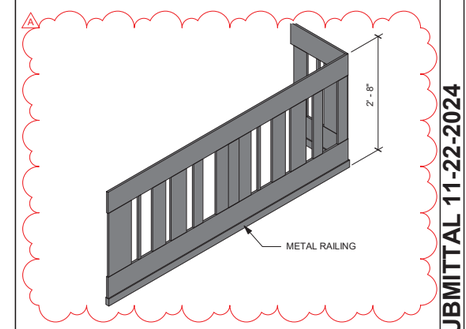

NEW FIXED METAL BARRIER 32" HEIGHT (A)

SITE PLAN KEYNOTES

1. EXISTING PROPERTY LINE TO REMAIN
2. NEW WINE EXPERIENCE AREA OF WORK
3. EXISTING ADJACENT PROPERTY TO REMAIN, (NIC)
4. EXISTING GARAGE ENTRANCE / EXIT TO REMAIN (NIC)
5. EXISTING FILTRATION PLANTER TO REMAIN.
6. EXISTING LANDSCAPING TO REMAIN, (NIC)
7. EXISTING FIRE HYDRANT TO REMAIN. (NIC)

LEGEND

- EXISTING LANDSCAPE AREA
- EXISTING 6" (150MM) CONCRETE CURB
- ACCESSIBLE PATH OF TRAVEL
- RETAIL AREA
- RESTAURANT AREA
- OUTDOOR SEATING AREA
- RESTROOM

2ND MINOR USE PERMIT SUBMITTAL 11-22-2024

CONSULTANT

HESTIA ATELIER

3 PETERS CANYON RD. #110
IRVINE, CA. 92606

SEAL

WINE EXPERIENCE
DANA POINT

WINE EXPERIENCE

34137 GOLDEN LANTERN,
DANA POINT, CA 92629

PROJECT #: --

ISSUE DATE: 11 - 07 - 2024

DESIGN MANAGER: E. C.

PRODUCTION DESIGNER: T. H.

CHECKED BY: I. D.

Revision Schedule

Rev	Date	By	Description
A	Date 1		MINOR USE PERMIT

SHEET TITLE:
GROUND FLOOR AREA PLAN
SCALE: AS SHOWN

SHEET NUMBER:
A0.4

11/22/2024 6:17:44 PM W:\Projects\One-Off\Dana Point 34137 Golden Lantern\Publish\2024-11-11 Minor Use Permit\2024-11-15 34137_OC Wine Experience _ Minor Use Permit.rvt